VARLA

EAGLE ONE

Owner's Manual

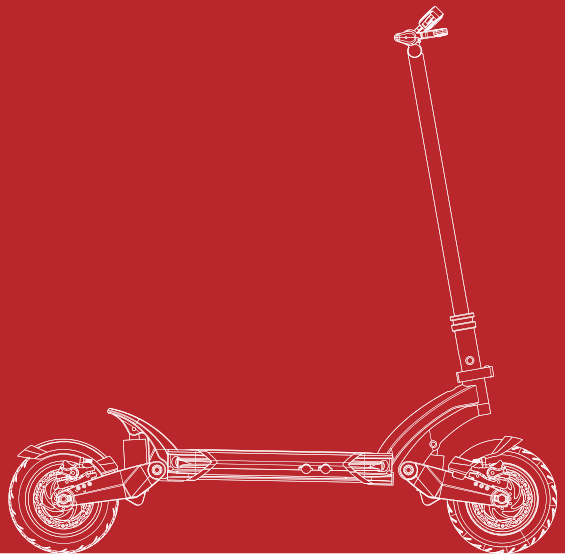

Foreword

Dear Customer,
Thanks for choosing Varla Eagle One Scooter!
We sincerely hope you could enjoy the fun and freedom of riding Varla Scooter. Please check out this letter to make sure you are well prepared to ride before you hop on the scooter.

Safety always comes first. You will work out how to ride your electric scooter quickly, however, remember to practice riding in a safe place with limited obstacles. Here are some key points to keep in mind when riding:

1. Wear flat shoes. Please do not wear flip flops or sandals while riding.
2. Better to wear a helmet during the riding, as well as other protective equipment, such as, elbow and knee protectors and padded gloves which will allow a firmer grip on the handlebars.
3. Please look ahead while riding! This may sound a little bit silly but people could be distracted by their surroundings. Be careful!
4. Make sure you're familiar with the scooter's functions.
5. DO NOT play your phone while riding.
6. DO NOT ride your scooter in the heavy rain or wet conditions as this could damage the battery and it will not be covered by the warranty for water damage.
7. If you ride in the dark, please wear visible and reflective clothing.
8. Do not switch ECO/TURBO and SINGLE/DUAL buttons while riding.
9. You need to pull the front and rear brakes simultaneously if you need brake while riding in gear 2 and above.

These are some basic tips, now start your learning of the Eagle One scooter in details!

Content

Safety Warnings 1

Scooter Overview 3

Product Specification 4

Assembly 6

Parts Instruction 7

How To Ride 12

Daily Maintenance and Repair 13

After Sales Service 22

Warranty Card 24

Safety Warnings

☆ Riding an electric scooter does present potential risks and caution is required. Like any vehicle, an electric scooter has inherent hazards associated with its use (for example, falling off or riding it into a hazardous situation).

☆ The recommended minimum rider age is 18 and older. Any rider unable to fit comfortably on the scooter should not attempt to ride it.

☆ Keep this product away from small children and remember that it is intended for use only by persons who are, at a minimum, completely comfortable and competent while operating the scooter.

☆ Do not exceed the weight limit 150kg. Rider weight does not necessarily mean a person's size is appropriate to fit or maintain control of the scooter.

☆ Check and maintain scooter conditions. Before use, check to confirm that covers and guards are in place and in serviceable condition. The scooter should be maintained and repaired in accordance with the manufacturer's specifications, using only the manufacturer's authorized replacement parts, and should not be modified from the manufacturer's original design and configuration.

☆ Obey the local laws or regulations.
Always check and obey any local laws or regulations which may affect the locations where the electric scooter may be used. Keep safely away from cars and motor vehicle traffic at all times. Only use where allowed and with caution.

☆ Wear proper protective equipment while riding.
Always wear proper protective equipment, such as an approved safety helmet (with chin strap securely buckled), elbow pads and knee pads. A helmet may be legally required by local law or regulation in your area.

☆ Don't switch Single/Dual-mode during riding!

☆ When riding in gear 2 and above, you need to break the front and rear brakes together.

☆ Do not modify the electric scooter at will.

Safety Warnings

1

1. Please wear a helmet during the riding and other protective gear, such as elbow and knee protectors.

2

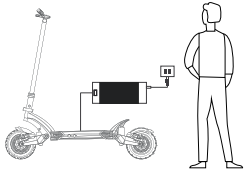

2. Charge the battery with the original charger, and someone needs to be nearby to avoid accidents when charging.

3

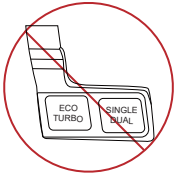

3. Do NOT press the SINGLE/DUAL button and ECO/TURBO button during riding.

4

4. Do not ride your scooter in the heavy rain or wet conditions as this could damage the battery.

5

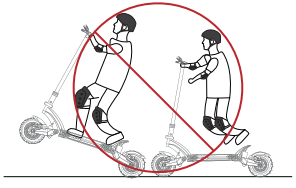

5. Dangerous actions are prohibited while riding.

6

6. Do not ride with one hand.

Scooter Overview

Product Specification

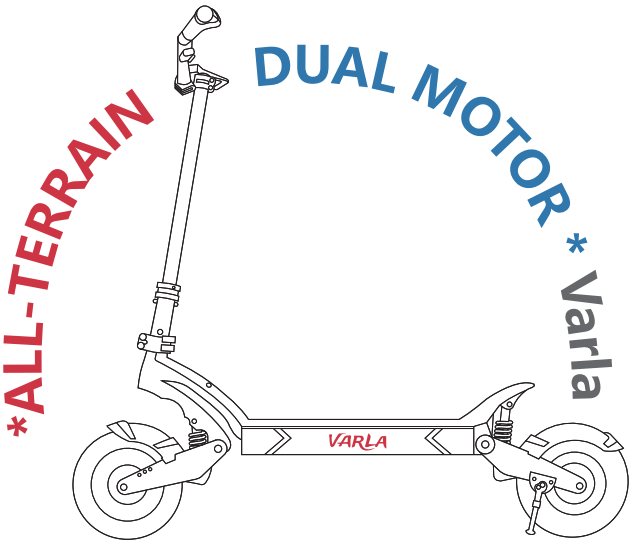

Battery	52V 18.2Ah Lithium Battery
Motor	Dual Motor, 1000W *2
Display	LCD
Max Speed	25 km/h
Max. Range	64+ km
Charging Time	8~9 Hours（Single charger） 4~5 Hours（Two chargers）
Material	Aluminum Alloy
Climbing Angle	30 Degrees
Lighting	LED, Front & Rear
Waterproof Rating	IP54
Payload Capacity	150 kg 120 kg
Brake	Dual Hydraulic Brake + ABS
Tires	10-inch Pneumatic Tires
Self Weight	35 kg

Product Specification

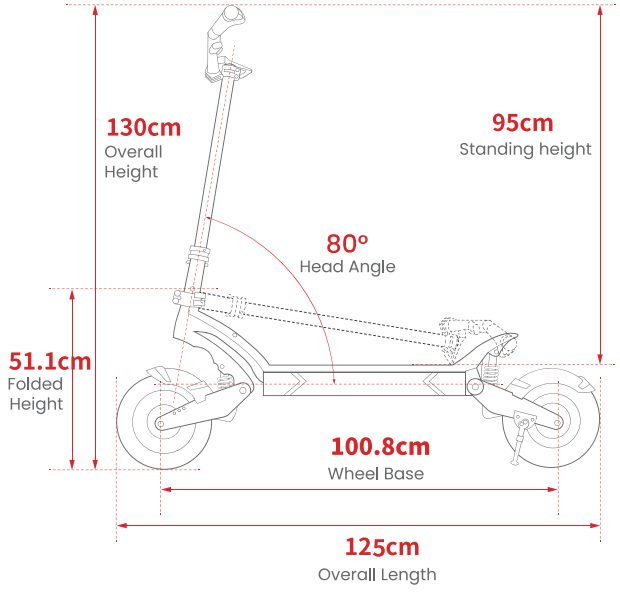

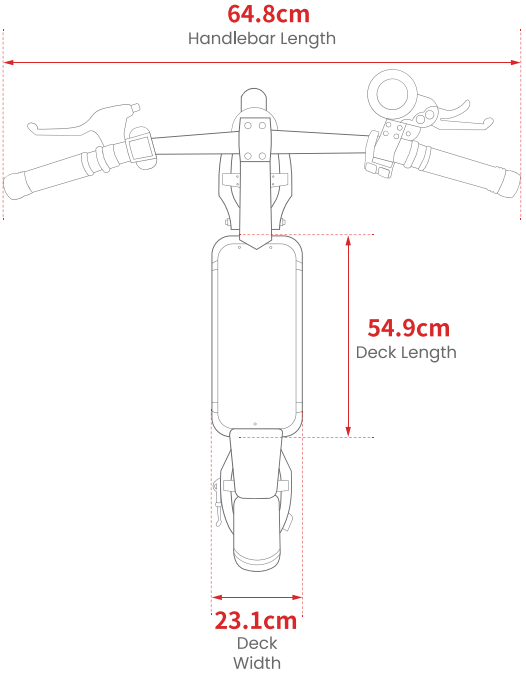

Assembly

How to Unfold the Scooter

How to Fold the Scooter

Parts Instruction

Power Switch

Press and hold the Power button for 3 seconds to turn on the LCD screen. The screen will automatically turn off after 90 seconds stop.

Speed Control

When the power is on, it would show gear 1, the top speed is 25 km/h;
Press the MODE button once, it would show 2 as gear 2;
Press the MODE button again, it would show 3 as gear 3;
Varla Eagle One is clamped at 25km/h to comply with the current legislation. (We take no responsibility if you choose to unbridle your electric scooter!)

Headlights

Press and hold the MODE button for 3 seconds, and the front light will be on.

Battery Level Indicator

You can see how much battery your scooter has left from this battery level indicator.

Voltage	58.8V	58.0V	57.1V	56.3V	55.4V	54.6V	53.8V	52.9V	52.1V	51.2V
Battery Level	100%	95%	90%	85%	80%	75%	70%	65%	60%	55%
50.4V	49.6V	48.7V	47.9V	47.0V	46.2V	45.4V	44.5V	43.7V	42.8V	40.2V
50%	45%	40%	35%	30%	25%	20%	15%	10%	5%	0%

LCD Display

When the power is on, the total mileage(ODO) shows on the screen.

Press the Power button once, the single mileage(TRIP) shows on the screen.

Press the Power button twice, the screen show the voltage.

When it shows the single mileage(TRIP), press and hold MODE button for three seconds to reset the TRIP.

Eco/Single Button

The default is Single-motor mode and Turbo mode.

Press the ECO/TURBO button in, then the scooter is in Eco mode.

Press the SINGLE/DUAL button in, then the scooter is in Dual motor mode.

Turbo/Eco button affects top speed for each gear, Single/Dual button affects acceleration more strongly.

IN OUT IN OUT

Do NOT press the SINGLE/DUAL button and ECO/TURBO button during riding.

Battery Introduction

The battery capacity, to a great extent, decides the endurance mileage of the scooter. Battery with larger capacity could have longer endurance mileage.

Please fully charge your e-scooter, before the first ride.

Battery Functions

◆ Balance the charge protection: balance the cell voltage automatically to protect the battery.

◆ Overcharge protection: Overcharge would damage the battery severely. Our battery would stop charging after been fully charged.

◆ Charging temperature protection: when the charging temperature is below 5 degree or above 40 degree, it would do harm to the battery, and may cause the battery to become unusable.

◆ Charging Over current protection: High current charging will seriously damage the battery, when the current is over 8V, the battery would stop charging automatically.

◆ Over discharge protection: Over discharge will seriously damage the battery, when the discharge current is over 58.8V, the battery would stop output automatically.

◆ Short circuit protection: when the battery detects a short circuit, it would cut output to protect the battery.

◆ Battery sleep protection: when the battery is on, if there's no connection to any electrical equipment, battery sleep protection would be automatically turned on.

Charge

- ◆ Power off the scooter.
- ◆ Plug the charger to the outlet, then plug the charger to one of charging port on the scooter.
- ◆ The optimum charging temperature is between 5-40 degrees. If the cell's temperature is not in this range, the battery will cease charging.
- ◆ Do not put the charger on the blanket while charging!

Battery Charger Outlet

How To Ride

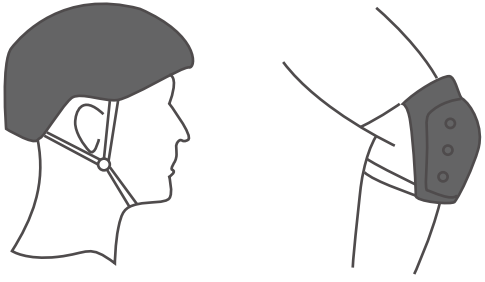

There's risk when learning a ride. Please wear a helmet and protective equipment throughout the course, as shown in the picture.

Attention:

◆ Before the ride, please wear the helmet, gloves, elbow pads, waist pads and other protective products.

◆ Do not ride on bumpy and slippery roads, such as dirt roads, gravel roads, and gathered water roads for the sake of safety if you are beginner.

◆ Do not ride on snow-piled road and sand beach.

◆ Do not ride on the up and down slopes over 35 degrees.

◆ Riders under the age of 18 are not allowed to ride our electric scooters.

◆ Riders over the age of 60 are not recommended to ride our electric scooters in high speed. (≤25 km/h)

◆ Do NOT push the SINGLE/DUAL button and ECO/TURBO button during riding. (Due to the closed-loop circuit in the scooter system, if pushed, you might be thrown out suddenly.)

Disclaimer: Varla Scooter will not accept liability for any claim for property loss or personal injury related to the improper use of the product.

Daily Maintenance and Repair

Scooter's Cleaning and Storage

Clean the main external metal components

- ◆ Dip a rag in soapy water, squeeze out as much water as possible, then scrub the parts.
- ◆ Brush the corners with an old toothbrush, such as the inside of the shock absorption, brake and calipers.
- ◆ Wet a rag with clean water to wash away the soap bubbles from the electric scooter

Clean the electrical area

- ◆ Slightly moisten the rag, and wipe the battery area and display screen.
- ◆ No need to use soapy water.

Wash the wheels

- ◆ Please use clean water. If you use soapy water, clean the tires carefully.
- ◆ Use a brush to carefully clean the tires to remove the detergent. In order to prevent the tires from slipping and driving safely.

NOTICE!

◆ Do not use alcohol, gasoline, kerosene or other corrosive chemical solution for cleaning, otherwise the appearance and internal structure of the scooter will be damaged.

◆ It is forbidden to use high-pressure water gun to spray and wash.

◆ Make sure that the electric scooter is in the off state, and the charging cable has been pulled out and the rubber cover of the charging port has been fastened. Otherwise, electric shock or serious fault may be caused due to internal water inflow.

When the scooter is not in use, store it in a dry and cool place indoors, and avoid long-term outdoor storage. Sun exposure / over heating / super cooling outdoor environment will accelerate the appearance and tire aging of electric scooter and reduce the service life of electric scooter and its battery pack.

Maintenance of the battery

◆ Do not use battery of other brands or model, otherwise there will be safety risks.

◆ Do not touch the battery, do not open or pierce the shell, to avoid short circuit caused by metal objects contacting battery. Failure to do so may result in battery damage or personal injury.

◆ Charge the battery with original charger, otherwise there's risk of damage or caught a fire.

◆ Improper disposal of waste batteries may seriously pollute the environment. Please comply with local regulations when discarding the batteries. Do not discard the batteries at will to protect the natural environment.

◆ After each use, fully charge the battery to extend the battery service life.

◆ Do not place the battery in a high temperature over 50 degree or a low temperature environment lower than -20 degree (for example: do not place an electric scooter or its battery unit in a car exposed to the sun in summer), and it is forbidden to put the battery pack into a fire, otherwise, it may cause battery failure, overheating, and even risk of fire. When not in use for more than 30 days, please fully charge it first, store it in a cool and dry place, and fully charge it once every 60 days, otherwise the battery may be damaged and this damage is not covered by the warranty.

Avoid recharging after the battery is completely depleted, and try to charge as soon as possible, which can greatly extend the service life of

the battery. In addition, the battery can exert a higher range and performance when used at normal temperature; and if it is used in an environment below 0°C, the battery life and performance will decrease. Typically, in an environment of -20°C, the cruising range may be only half or lower than at normal temperature. After the temperature rises, the battery's cruising range will be restored.

NOTICE!

A fully charged electric scooter will exhaust its stored power after about 120-180 days of standby. There is a smart chip inside the battery to record the charging and discharging of the battery. The damage caused by long-term non-charging will not be able to be recharged. At this time, if the battery is not charged in time, it may cause the battery to be over-discharged and damaged. This damage is irreversible, and Cannot enjoy free warranty.

Note: Non-professionals are forbidden to disassemble the battery pack at will, otherwise it may cause serious safety accidents due to the motor or short circuit!

Handlebar Stem Wobble Test and Adjust

After long-term use, the handlebar stem may wobble. Please lock the clamp first, then tighten these 2 screws in the stem.
Step 1: Unlock one of the clamps, then slightly tighten the screw, lock the clamp, then adjust the other one. Try it for 2-3 times until you lock it tightly.
Step 2: Use the assembly tool to tighten these 2 screws at the bottom of the stem.

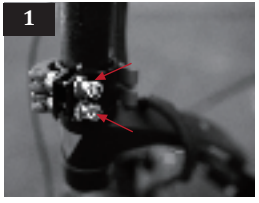

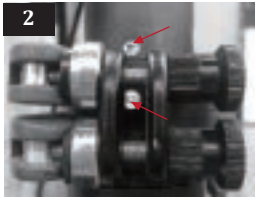

Tire Pressure

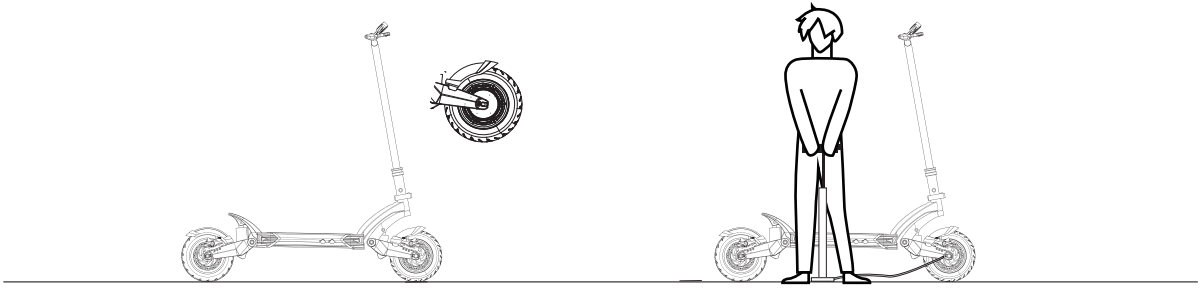

◆ The maximum air pressure displayed on the Eagle One tire sidewall is 50, the recommended tire pressure is between 40-50

◆ If the weather is hot, you can slightly lower 2-3 psi the air pressure inside the inner tube, and vice versa if the weather is cold. For heavier rider, you can slightly higher 2-3 psi in the inner tube. But in no case can it exceed 50 psi.

When the front and rear tires are lack of air, please inflate them in time to avoid damaging the tires.

P-Setting Instruction

Accessing Settings

- ◆ Hold the MODE and Power buttons (3 seconds) to access the P-setting menu.
- ◆ Press the Power button to select the P-setting to adjust.
- ◆ Press the MODE button to adjust the value.
- ◆ To save settings, allow the LCD display to timeout (8 seconds) or long press MODE and Power buttons to exit the menu.

Setting Menu

Setting	Feature	Notes
P1	LCD brightness	1: low 2: mid 3: high Default: 3
P2	Speedometer units	0: kph 1: mph Default: 0

Setting	Feature	Notes
P3	Battery voltage (do not adjust)	From 24V to 60V Default: 52V
P4	Auto-off time	0: not set 60: 60 min Default: 5
P5	Unused	
P6	Wheel diameter (do not adjust)	Default: 10.0
P7	Motor magnets (do not adjust)	From 0 to 255 Default: 28
P8	Power level	1: slowest 100: fastest Default: 100 km/h
P9	Start mode	0: zero start 1: kick to start Default: 0

Setting	Feature	Notes
P10	Unused	
P11	Regenerative/Electronic brake strength	0: off 1: weak 5: max Default: 3
P12	Acceleration	0: off 1: weak 5: strong Default: 3
P13	Unused	
P14	Unused	
P15	Automatic scooter voltage shut-down (do not adjust)	From 37.0 to 47.0 Default: 42.0
P16	Lifetime odometer reset	Long-press Mode button to reset to 0

Setting	Feature	Notes
P17	Cruise control	0: off 1: on Default: 0
P18	Unused	
P19	Unused	
P20	Communication protocol (can not adjust)	Default: 4

Fault Codes

Fault Code	Feature	Fault Code	Feature
2	Brake	10	Faulty comms between controller and LCD
4	6 km/h cruise	11	Faulty comms between controller and LCD
6	Battery under voltage	12	BMS failure
7	Motor faulty	13	Headlight failure
9	Controller faulty		

When the dashboard displays an error code, please contact the Varla after-sales team as soon as possible.

After Sales Service

Warranty Details

If you encounter any problems in the following forms during the warranty period, Varla will guarantee to provide complete after-sales service.

Part Name	Warranty Period	Service Content
Throttle	24 months	Free maintenance
Controller	24 months	Free maintenance
Frame	24 months	Free maintenance
Motor	12 months	Free maintenance
Battery	12 months	Free maintenance
Charger	12 months	Free maintenance
Inner Tube	1 Month or 100KM	Free replacement
Brake Pad	1 Month or 100KM	Free replacement
Kickstand	1 Month or 100KM	Free replacement
Fenders	1 Month or 100KM	Free replacement
Aesthetic Damage	Not Covered	-

Warranty Notes

During the warranty period, any damage caused by the following reasons will not covered by the warranty:

1. Failure to follow this instruction manual for maintenance.
2. Incorrect use or traffic accident or other accidental collision damage.
3. Use damaged or other accidental collision when driving on abnormal condition roads.
4. Rapid aging and malfunction due to a long time sun exposure or leave the scooter outdoors for a long time.
5. The use of electric scooters for other purposes to perform dangerous actions such as special effects, which leads to rapid aging and malfunction of this product.
6. Natural disasters, man-made irresistible reasons cause vehicle damage.

Note: Please visit Varla's official website for the latest after-sales, return policy, warranty information, etc.

Official Website:

USA varlascooter.com

AU au.varlascooter.com

EU eu.varlascooter.com

VARLA

WARRANTY CARD

Please complete the following details

Owner's Name: _____

Address: _____

City: _____ State: _____ Zip Code: _____

Order Number(s): _____ Serial number(s): _____

Date of Purchase: _____

phone number: _____ Email: _____

VARLA